The Earthquake Actions and Testing Approaches for Curtain Wall

Yangling Wang, Wensheng Lu, Baofeng Huang

E-mail:wenshenglu@vip.163.com

State Key Laboratory Of Disaster Reduction In Civil Engineering, Tongji University, China

1 Introduction

2 Earthquake Action Mechanism

3 Shaking Table Test Method

4 An Application of Hybrid Simulation

5 Summary

1. Introduction
1.1 curtain wall system

Institut du Monde Arabe, Paris 5ème

1.1 curtain wall system

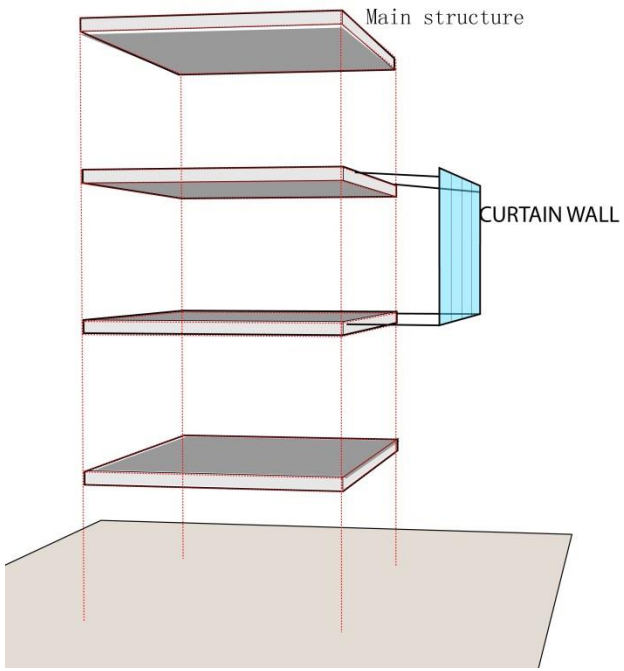

Curtain wall and the main structure

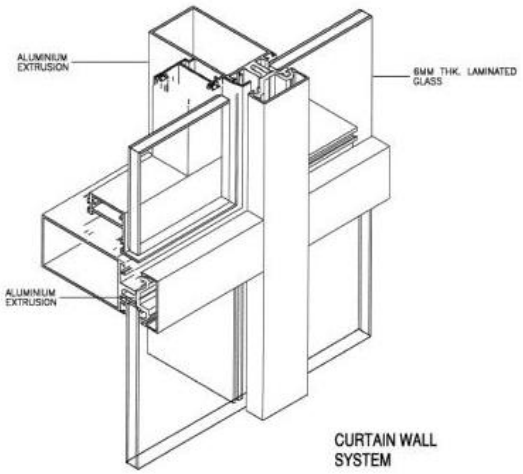

The curtain wall system :

curtain wall unit and the support system

It can bear the various actions directly, such as wind-induced air pressure, wind-induced debris impact and the earthquake actions.

1.2 Earthquake damage

- Curtain wall unit failure
  - such as panel breakage and panel fallout

Panel breakage and fallout in Wenchuan earthquake, 2008

- Support system failure
  - such as anchor failure and support structure buckling

Support structure bucking in Mexico City earthquake, 1985

The anchor failure and the Concrete panels falling down, Alaska earthquake,1964

2. Earthquake action mechanism of curtain wall

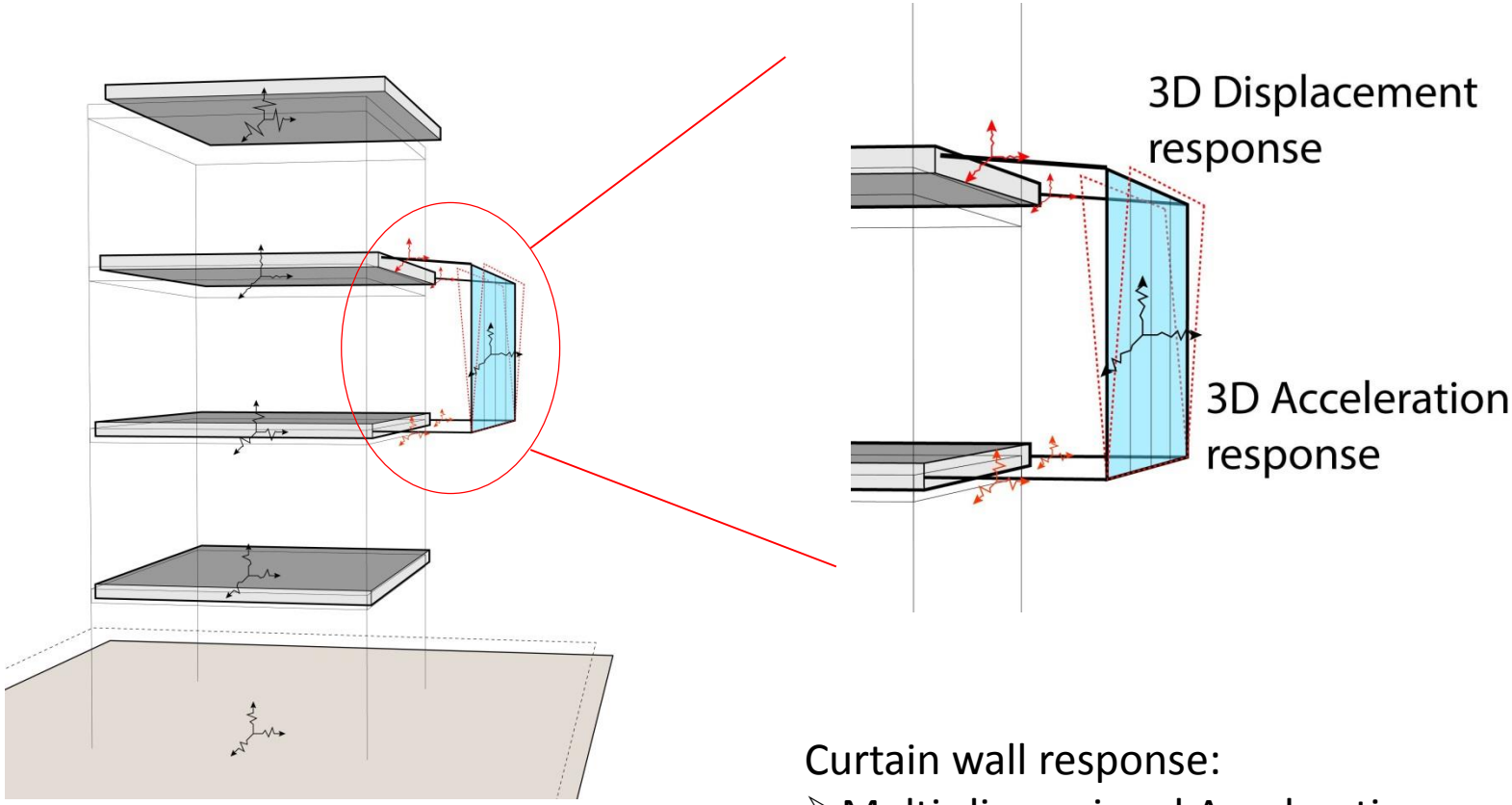

The response of curtain wall

Curtain wall response:

- Multi-dimensional Acceleration response
- Multi-dimensional Displacement response

2. Earthquake action mechanism of curtain wall

2.1 main structure response

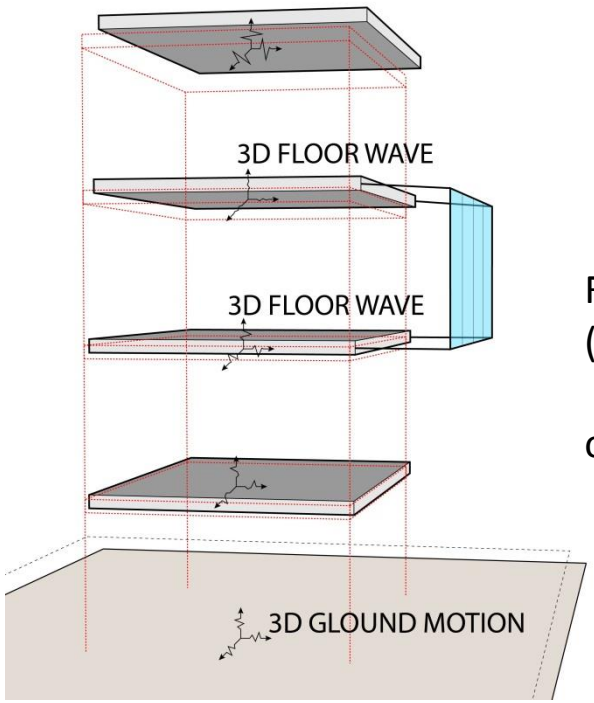

Finite element model (FEM) analysis

or Shaking table test

The acceleration time history responses:

$$\ddot{x}_{ix}(t)、\ddot{x}_{iy}(t)、\ddot{x}_{iz}(t)$$

The displacement time history responses :

$$x_{ix}(t)、x_{iy}(t)、x_{iz}(t)$$

The response of main structure under earthquake

2.2 curtain wall response——Acceleration Response

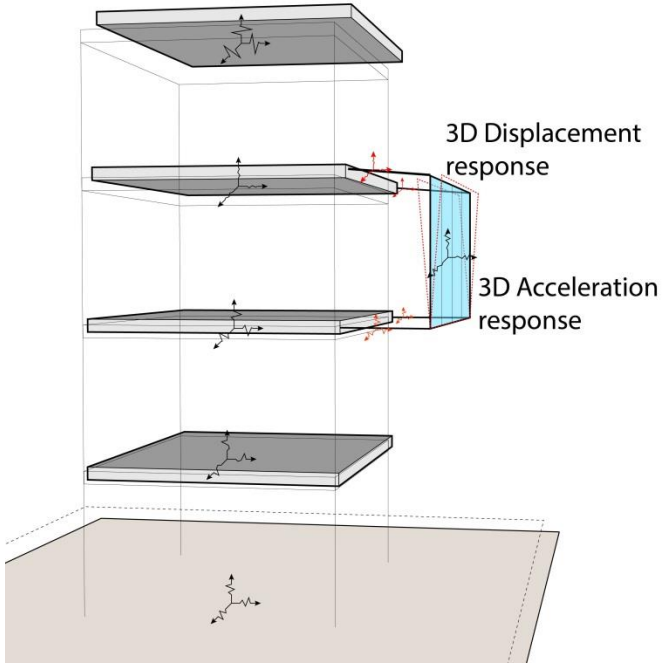

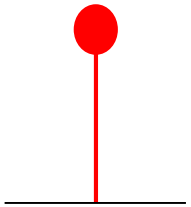

The curtain wall is idealized as SDOF system

Assuming the curtain wall system between two adjacent stories as a single-degree-of-freedom system, which is subjected to floor response acceleration, the equation of motion is given by:

$$\ddot{x} + 2\zeta\omega\dot{x} + \omega^2 x = -\ddot{x}_f$$

The analysis of acceleration response of curtain wall:

$$\ddot{x} + 2\zeta\omega\dot{x} + \omega^2 x = -\ddot{x}_f$$

Spectrum Analysis

$$S_a^N(\zeta, \omega)$$

enveloping response spectrum

$$S_{ea}(\zeta, \omega) = \max[S_a^N(\zeta, \omega)]$$

smooth design response spectrum

$$S_a^s(\zeta, \omega)$$

Affected factors:
geographic location
designed earthquake waves
dynamic property of the main structure
installation location of the curtain wall
dynamic property of the curtain wall

2.2 curtain wall response——Displacement Response

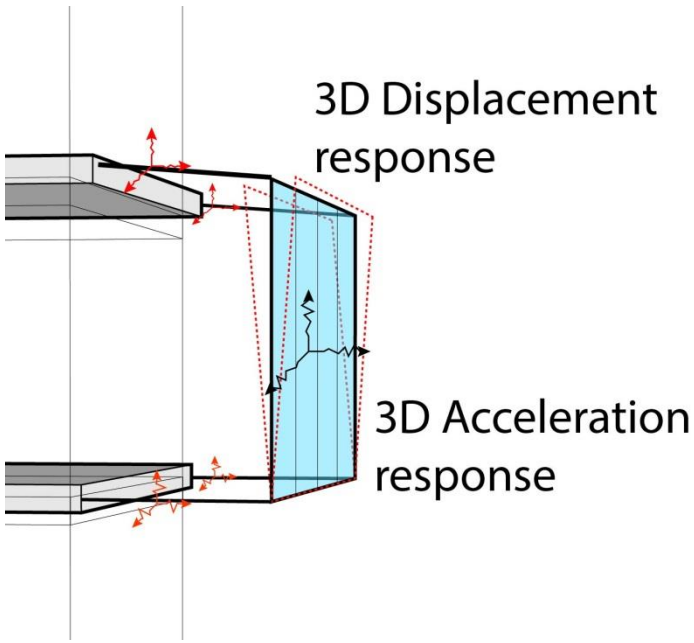

The displacement response of curtain wall

The inter-story relative displacement response time history is defined as:

$$x_{ir}(t) = | x_i(t) - x_j(t) |$$

The corresponding maximum inter-story drift ratio could be expressed as:

$$\theta_i = \frac{|x_{ir}|_{max}}{h_j}$$

The analysis of displacement response of curtain wall:

$$F_{ir}(\omega) = \int_0^{t1} x_{ir}(t) e^{-iwt} dt \ , \quad i = \sqrt{-1}$$

Fourier amplitude spectrum analysis

$$FS_{ir}(\omega) = \sqrt{\left[\int_0^{t1} x_{ir}(t) sin\omega t dt\right]^2 + \left[\int_0^{t1} x_{ir}(t) cos\omega t dt\right]^2}$$

Enveloping Fourier amplitude spectrum

$$FS_e(\omega) = \max[F_N(\omega)]$$

Smooth design Fourier amplitude spectrum

$$FS(\omega)$$

Affected factors:
geographic location
designed earthquake waves
dynamic property of the main structure
installation location of the curtain wall

3. Shaking table test method of curtain wall

3.1 Current method

Actions Reoccurrence

- Input wave: ground motion
- Testing framework: simulate the main structure

Performance Evaluation

- Uniformed evaluation indexes: acceleration amplification factor=5.0(the peak acceleration value of the curtain wall members should be 5.0 times larger than the designed peak ground acceleration)
- inter-story drift ratio amplification factor=3.0 (the drift capacity of the curtain wall should be 3 times larger than the limit values for elastic inter-story drift of the main structure)

Recent shaking table tests for curtain wall in China are conducted on the current Chinese Codes(Shaking table test method of earthquake resistant performance for building curtain wall, GB 18575-2001, Technical Code for glass curtain wall engineering, JGJ102-2003 and Technical Code for Metal and Stone Curtain Walls Engineering, JGJ133-2001 et al).

3.1 Current method——Shortcomings

Based on the earthquake action mechanism of curtain wall, the recent shaking table test for curtain wall have some shortcomings:

Actions Reoccurrence

- Input waves: do not reflect the influence of many factors
- Testing framework: cannot reoccur the required coupled acceleration and displacement actions simultaneously

Performance Evaluation

- uniformed evaluation index: do not consider the characteristics of frequency content and duration of strong motion of input actions
- does not provide definite seismic performance levels and objectives

3.2 Modified method

Modified method

Multi-dimensional multi-modal hybrid simulation:
reoccur the coupled multi-dimensional multi-modal seismic actions on the curtain wall

performance-based seismic evaluation method:
the damage of curtain wall should meet the required performance level under different earthquake levels

3.2 Modified method——Hybrid simulation

1. Multi-node Excitation testing method：shaking table + displacement step by step loading device

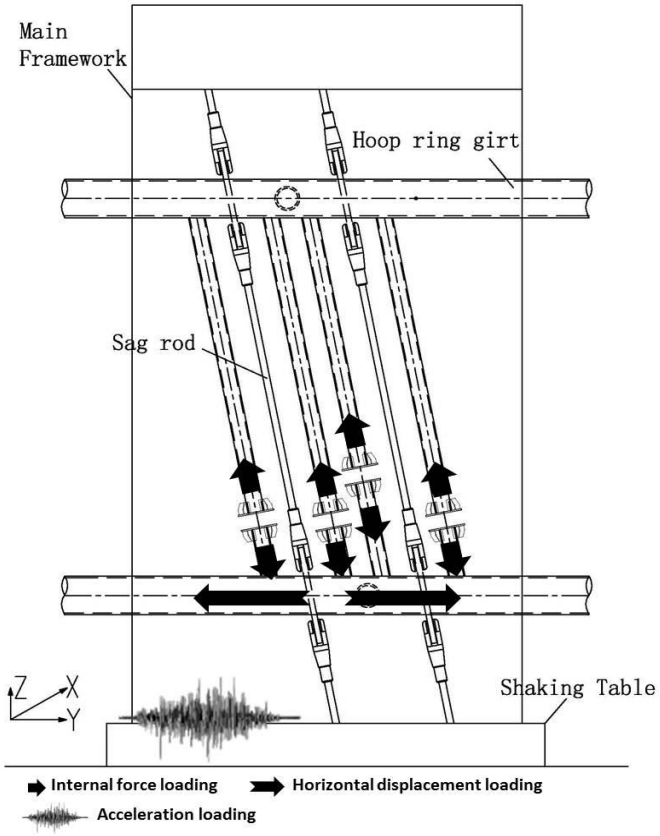

Schematic diagram of Multi-node Excitation testing method

2. Real-Time Multi-Note Excitation Hybrid Simulation:

shaking table + dynamic actuator

3. Sub-unit Hybrid Simulation:

the curtain wall specimen is divided into experimental and computational substructures

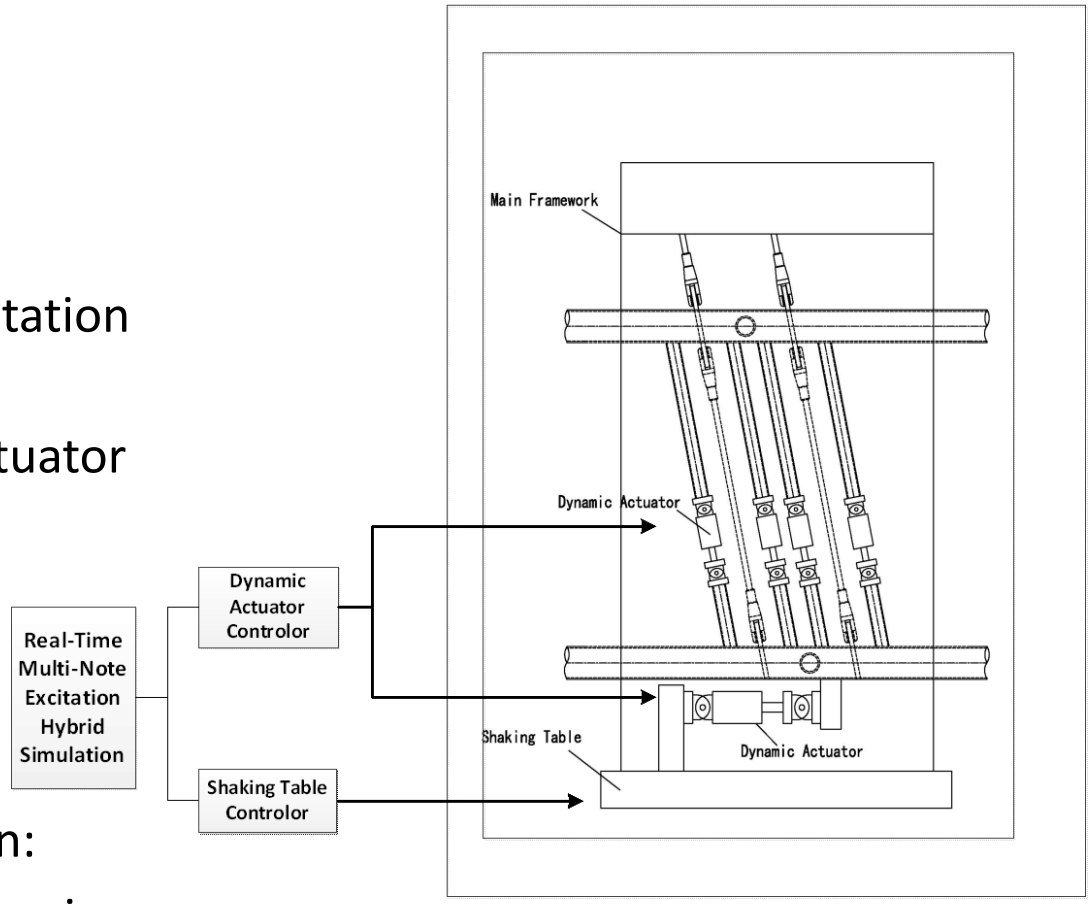

Schematic diagram of real-time multi-note excitation hybrid simulation

⇨ The validity and feasibility of the first method was verified in the test of outer-skin curtain wall of Shanghai Center Tower.

3.2 Modified method
—performance-based seismic evaluation method

The procedures:

Confirm the performance objective—— matching with the seismic classification of main structure

Conduct the hybrid simulation —— the designed smooth spectra and the evaluation indexes

Check the damage level and required evaluation indexes to evaluate the seismic performance——the damage of curtain wall should meet the required performance level

3.2 Modified method

——Seismic performance objectives

Table 1 Seismic performance objectives of curtain walls

Performance objective	The classification of main building	Earthquake demand level		
		Frequent earthquake	Precautionary earthquake	Rare earthquake
Special precautionary class	Category A: major buildings or the failure of which would result in severe secondary disaster	Basic Intactness	Basic Intactness	Basic Intactness
Emphasis precautionary class	Category B: the continual function is necessary during earthquake or could be restored quickly after earthquake	Basic Intactness	Basic Intactness	Mild Damage
Standard precautionary class	Category C: not assigned to either category A, B or D buildings	Basic Intactness	Mild Damage	Moderate Damage
Basic precautionary class	Category D： less important buildings	Mild Damage	Moderate Damage	Serious Damage

3.2 Modified method

——Seismic performance levels

Table 2 Performance level of architectural curtain walls

Performance level		Performance requests
Level 1	Intactness	Appearance undamaged, using function(heat retaining property, impermeability, sound insulation, fireproof performance, etc.) unaffected, no repairs are required
Level 2	Basic Intactness	Appearance basically intact, using function basically unaffected, some minor repairs may be required
Level 3	Mild Damage	Small relative deformation appears in adjacent units, sealant, adhesive and connections, using functions slightly affected or partly lost, Repair easily (only few connections or adhesive need to be replaced)
Level 4	Moderate Damage	remarkable relative deformation appears in adjacent units, sealant, adhesive, connections and support structure; crack appears in panel, damages are not result in a life safety hazard; using functions slightly partly or completely lost; Repair not be easily (some panels or support structure need to be replaced)
Level 5	Serious Damage	serious relative deformation appears in adjacent units, sealant, adhesive, connections and support structure; piercing crack appears in panel, some panel and support structure fall off, damages are restrained to prevent collapse; using functions completely lost; the curtain wall is likely to be demolished

3.2 Modified method

——Seismic performance evaluation index

- The acceleration amplification factor index
  - the enveloping value of the floor acceleration amplification factor under different earthquake level could be adopted as AAFI
- The inter-story drift ratio amplification factor index
  - the enveloping value of the inter-story drift ratio amplification factor under different earthquake level could be adopted

⇨ More efforts should be made to obtain the general applied indexes.

4. An application of hybrid simulation
4.1 General Information

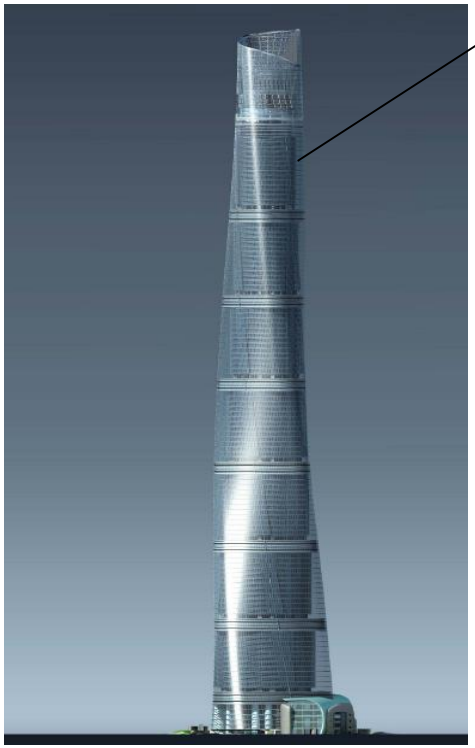

Double-skin
Glass curtain wall

Shanghai Center Tower

Outer-skin
Glass curtain wall

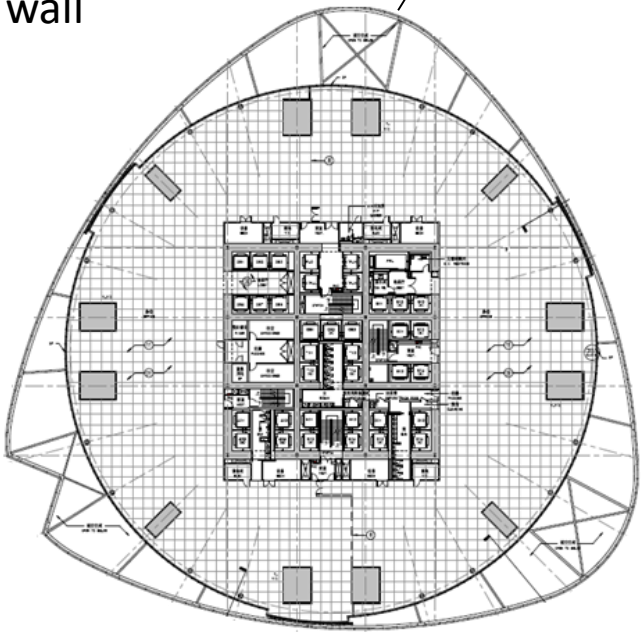

Typical floor plan

4.1 General Information

- zonal hanging system:
  - Hanged to the mechanical floor vertically by sag rods
  - Connected to the inner tower horizontally by radial struts

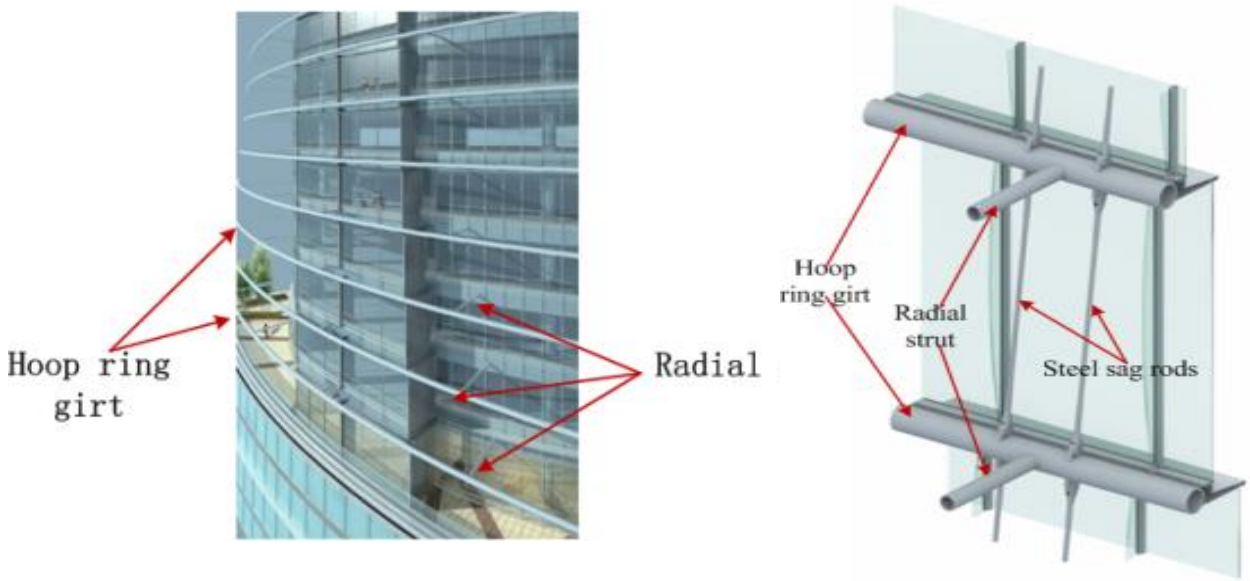

Support system for zonal hanging architectural curtain wall

4.1 General Information

Two types of curtain wall mock-ups:

Panel 1: 4500 by 1970 by 12mm
Panel 2 :4300 by 1320 by 12mm

Shaking table setup for mock-up test of curtain wall

4.2 Analysis of seismic action

- Acceleration action

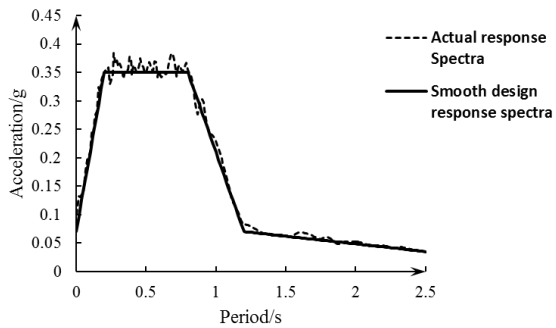

a

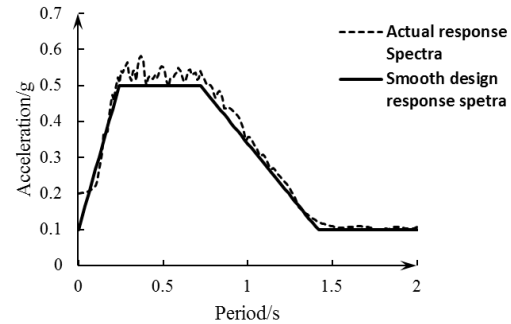

c

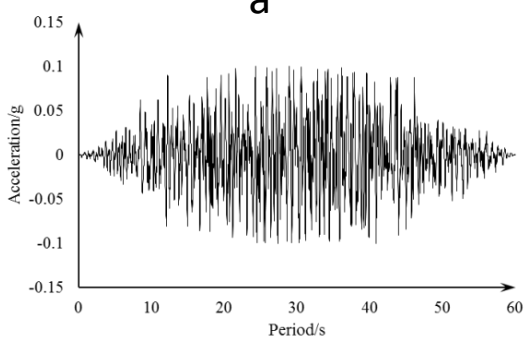

b

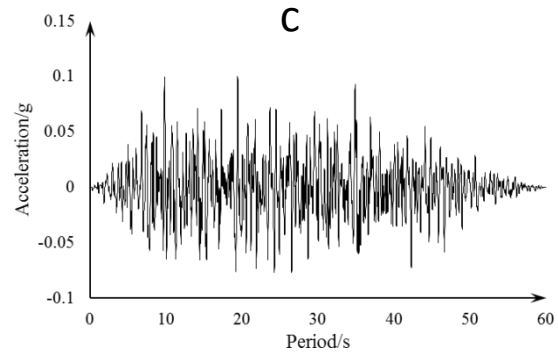

d

horizontal direction

vertical direction

Acceleration spectra and synthetic accelerograms in horizontal and vertical directions

- Acceleration action

The evaluation index

—— the enveloping value of the amplification factor

Table3 Envelope values of earthquake actions (Seismic performance evaluation index)

		Intensity 7		
		Frequent earthquake	Precautionary earthquake	Rare earthquake
Acceleration /g	Horizontal	0.18	0.50	1.00
	Vertical			
In-plane horizontal drift /mm （drift ratio）		9 (1/500)	17 (1/272)	56 (1/80)
Internal force of sag rods /kN	Max	310.0	405.9	588.5
	Min	208.8	101.2	0

4.2 Analysis of seismic action

In-plane relative drift actions—displacement step-by-step load method

- Horizontal relative drift loading
- Vertical relative drift loading—internal force of sag rods

Table3 Envelope values of earthquake actions (Seismic performance evaluation index)

		Intensity 7		
		Frequent earthquake	Precautionary earthquake	Rare earthquake
Acceleration /g	Horizontal	0.18	0.50	1.00
	Vertical			
In-plane horizontal drift /mm（drift ratio）		9 (1/500)	17 (1/272)	56 (1/80)
Internal force of sag rods /kN	Max	310.0	405.9	588.5
	Min	208.8	101.2	0

4.3 Multi-dimensional multi-modal Loading

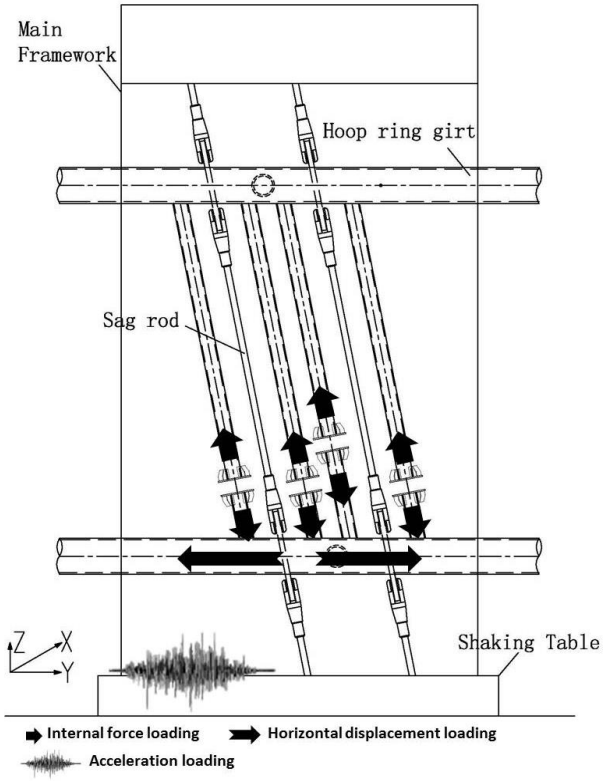

Schematic diagram of the test apparatus to reoccur the multi-dimensional multi-modal seismic actions on specimen

a） main framework and shaking table

b） horizontal displacement loading device

c） internal force loading device

Multi-node loading apparatus

Multi-dimensional multi-modal loading process:

rare earthquake + the maximum value of horizontal relative displacement and internal force

4.4 Testing results

Table4 Actual peak acceleration of hoop ring girt and the Peak relative displacement of upper and down hoop ring girt

			Intensity 7		
			Frequent earthquake	Precautionary earthquake	Rare earthquake
Acceleration /g	Actual values of panel1	X	0.26	0.77	1.46
		Y	0.21	0.59	1.50
		Z	0.19	0.60	1.07
	Actual values of panel2	X	0.27	0.69	1.34
		Y	0.21	0.61	1.56
		Z	0.20	0.62	1.07
	Evaluation index		0.18	0.50	1.00
In-plane horizontal drift /mm（drift ratio）	Panel 1		11（1/410）	22 (1/205)	61 (1/74)
	Panel 2		11（1/410）	21 (1/214)	65 (1/69)
	Evaluation index (According to Table 4)		9 (1/500)	17（1/272)	56 (1/80)

4.4 Testing results

Table5 Peak internal force response of sag rods /kN

			Pane1	Pane2
Rare earthquake of intensity 7	Max	Actual values	563.8	629.1
		Evaluation index	482.2	588.5
	Min	Actual values	-49.7	-9.3
		Evaluation index	0	0

⇨ The amplitude of excitation for the specimen have satisfied the designed intensity in different earthquake level.
All of them met the required index respectively.

Attrition and deformation
of connection,
rare earthquake

Deformation on rubber gaskets,
precautionary earthquake

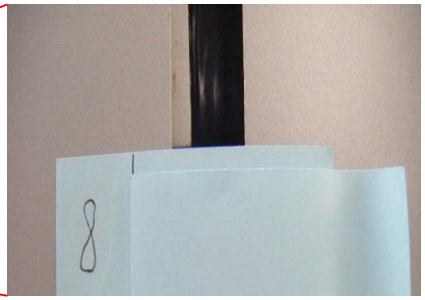

relative deformation between
adjacent units, precautionary
earthquake

Representative damage

4.5 Seismic performance evaluation

Table6 Seismic performance evaluation of the curtain wall specimen

		Performance level	Damage phenomena
intensity 7	Frequently Earthquake	level 1	the specimens were undamaged
	Precautionary earthquake	level 2	slight deformation on adjacent units and few rubber gaskets were observed, and the using function were unaffected
	Rare Earthquake	level 3	the increased but small relative deformation on adjacent units and loose or attrition on some connections were observed, but no serious damage was occurred on glass panels, support system and the connections of the specimens

⇨ The damage of curtain wall have met the required performance level under different earthquake levels.

The outer-skin curtain wall of Shanghai Center Tower met the seismic performance objective.

5. **Summary**

- The multi-dimensional multi-modal coupled earthquake action mechanism of architecture curtain wall is discussed definitely, which works as the theoretical foundation of the modified method.
- Hybrid simulation is needed to reoccur the coupled multi-dimensional multi-modal seismic actions on the curtain wall.
- The performance-based seismic evaluation method is developed based on the proposed performance levels and objectives.

Acknowledgement

- Shanghai Tower Construction and Development Co., Ltd, Shenyang Yuanda Aluminum Industry Engineering Co., LTD, The Architectural Design & Research Institute of Tongji University & State Key Laboratory of Disaster Reduction in Civil Engineering of Tongji University are gratefully acknowledged.
- Team work of Shicheng Li and Dong Liu are gratefully acknowledged.

Thanks for your attention!

2013 UBC-Tongji-CSRN Symposium
Modern Solutions to Seismic Risk Mitigation:
A Sino-Canada Joint Effort to Deal with a
Challenging Problem

UBC

CSRN
RCRP